Storage guidance & codes

Martin Cotterell

EUROPEAN UNION
Investing in Your Future
European Regional Development Fund 2007-13

Department of Energy & Climate Change

The Institution of Engineering and Technology

BRE NATIONAL SOLAR CENTRE

bre

BRE NATIONAL SOLAR CENTRE

Battery storage guide
NSC project - WIP

Target audience:

A) End users:

- Benefits of energy storage systems
- Financial payback
- Pros and cons of different system types
- Implications of …
    - Different system sizes
    - Different operating regimes.

B) System designers & installers:

Information to ensure safe and effective energy storage systems are designed, specified and installed.

NSC storage guide

Four parts

1) System components and configurations

2) System operation

3) Performance analysis (inc control strategies & sizing)

4) Installation and design standards

Components & configurations

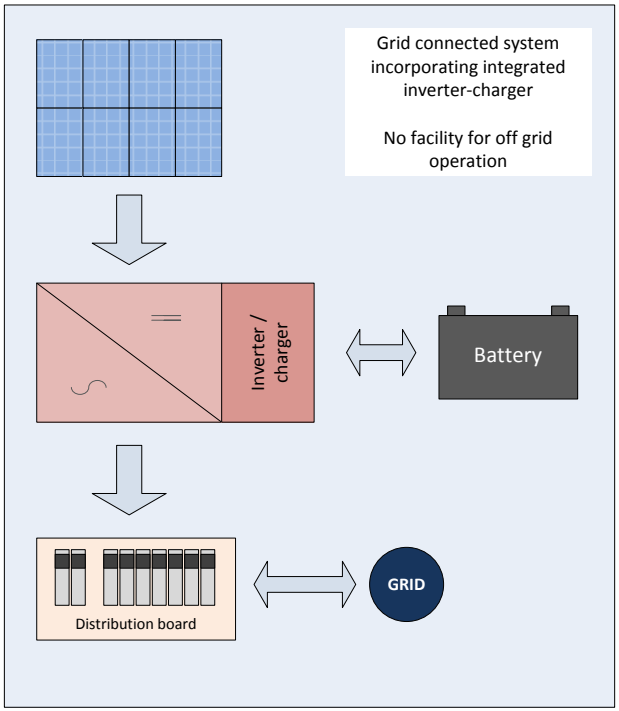

Components & configurations

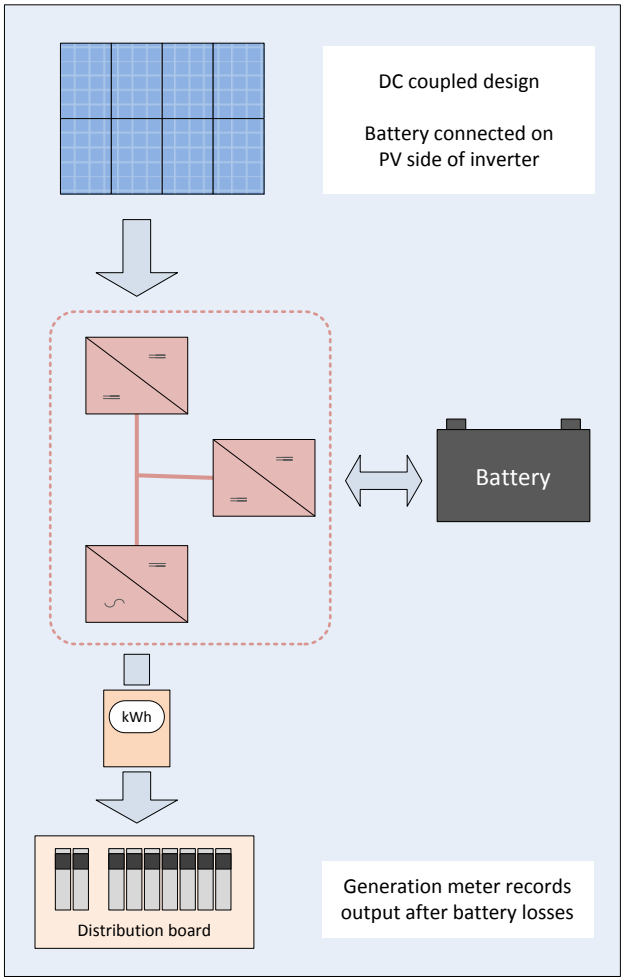

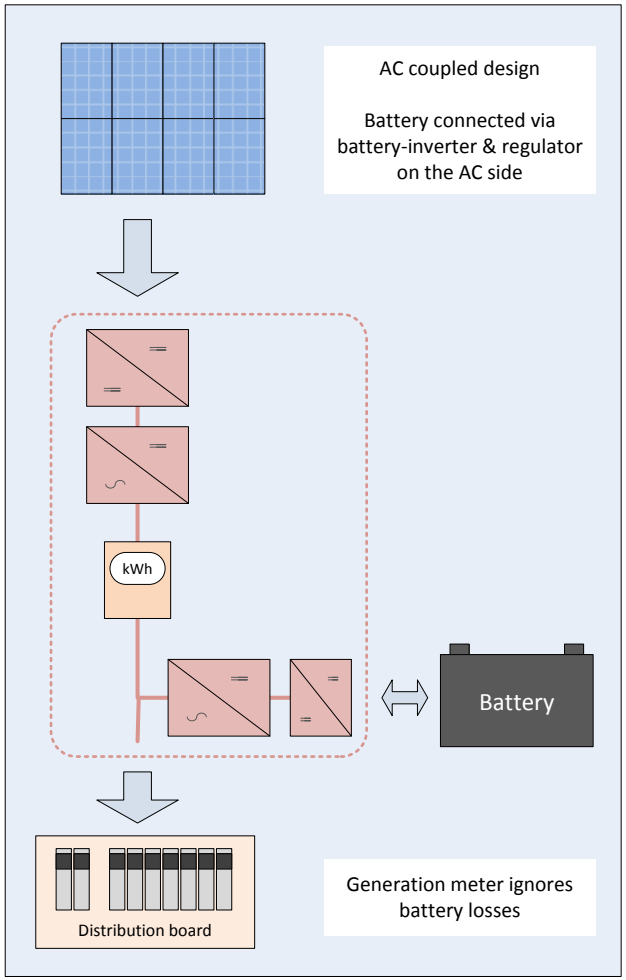

Systems with off – grid capability

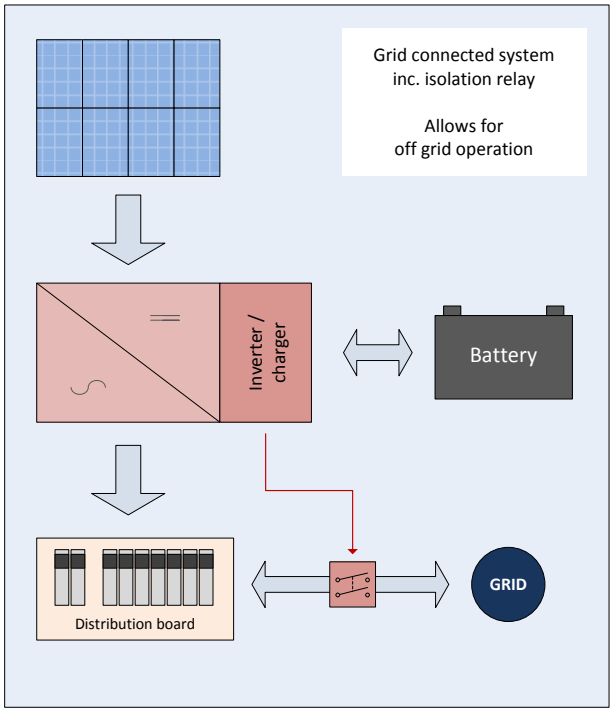

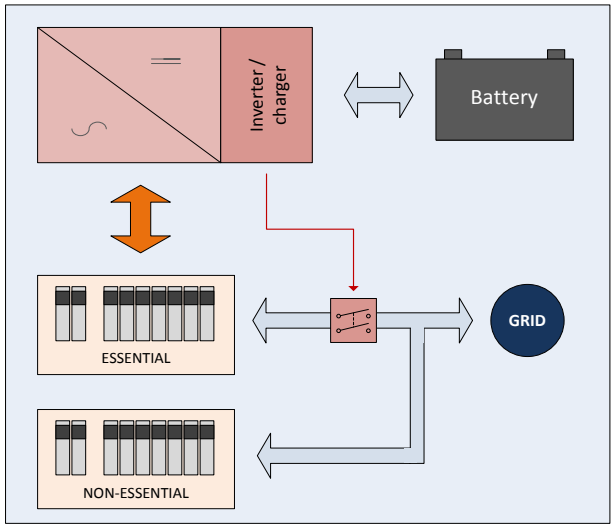

System operation & performance analysis

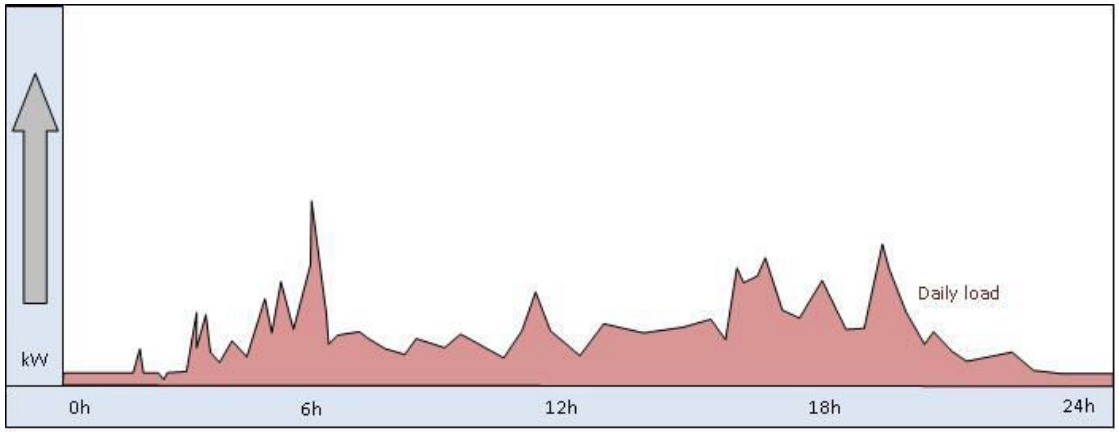

Load profile

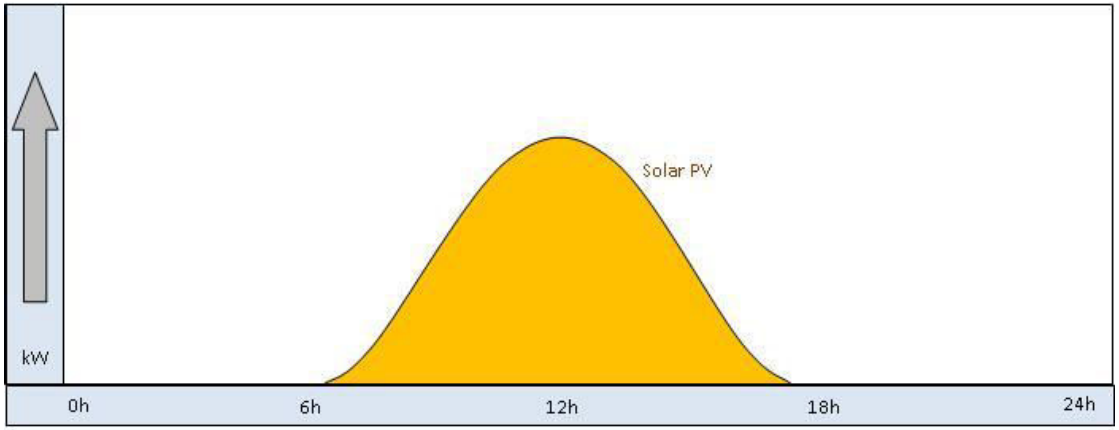

PV generation profile

PV generation + on site loads … no battery

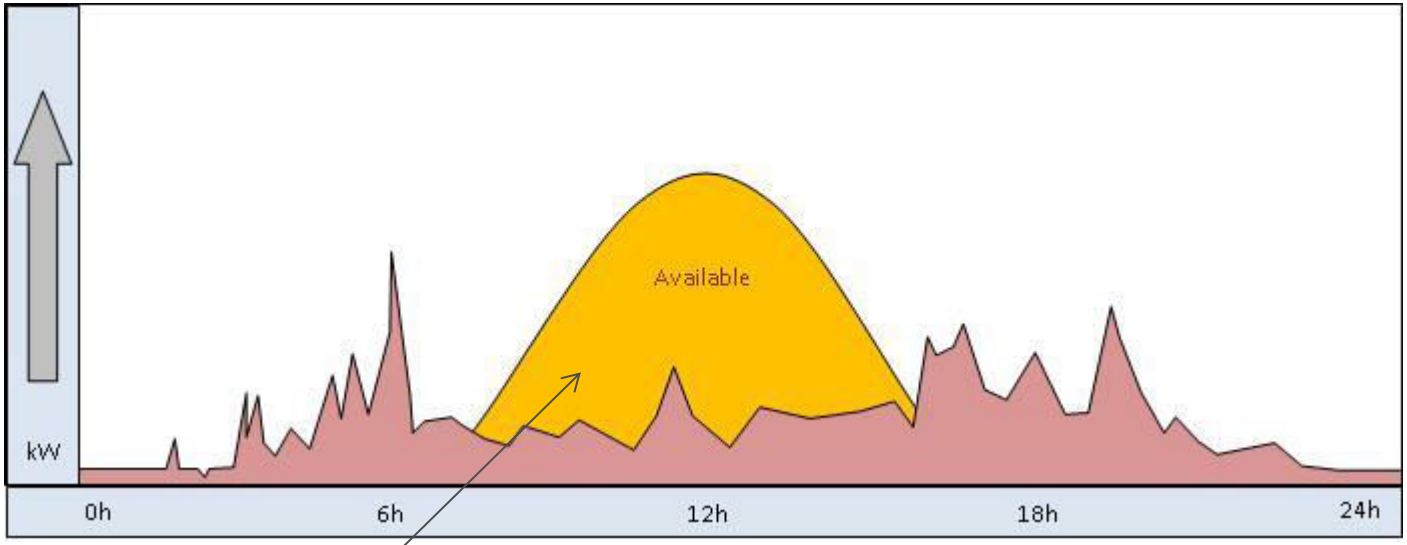

Excess power exported to grid

PV generation + on site loads + battery

Battery “time-shift” ... using PV power out of the solar day

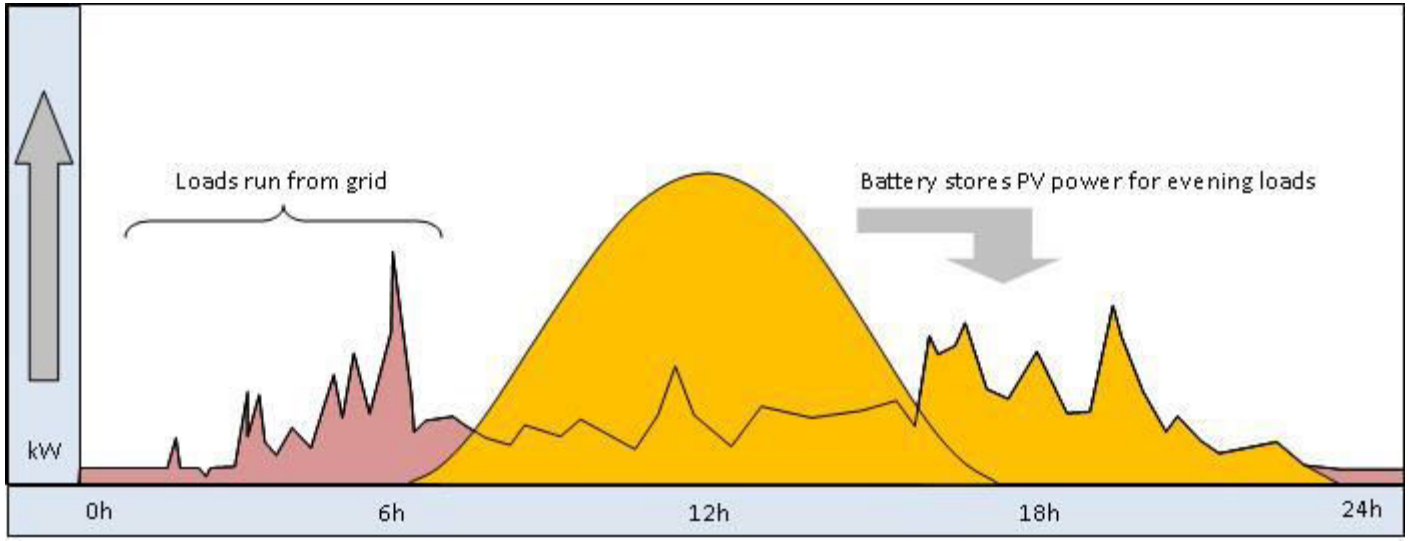

Example with a relatively large battery
(all surplus energy used to charge battery)

bre

BRE NATIONAL SOLAR CENTRE

Understanding effect of battery size …

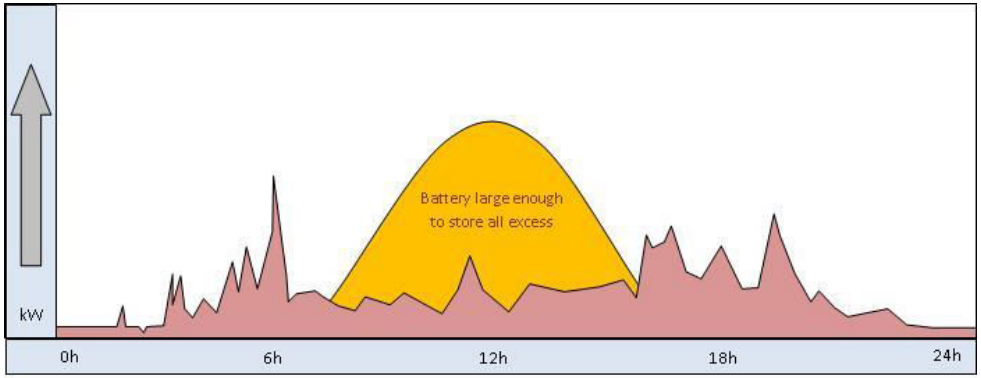

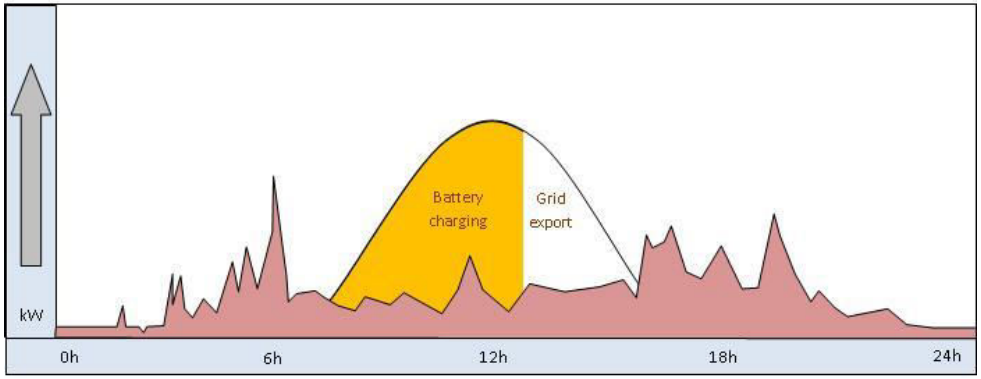

Smaller battery

System operation & performance analysis

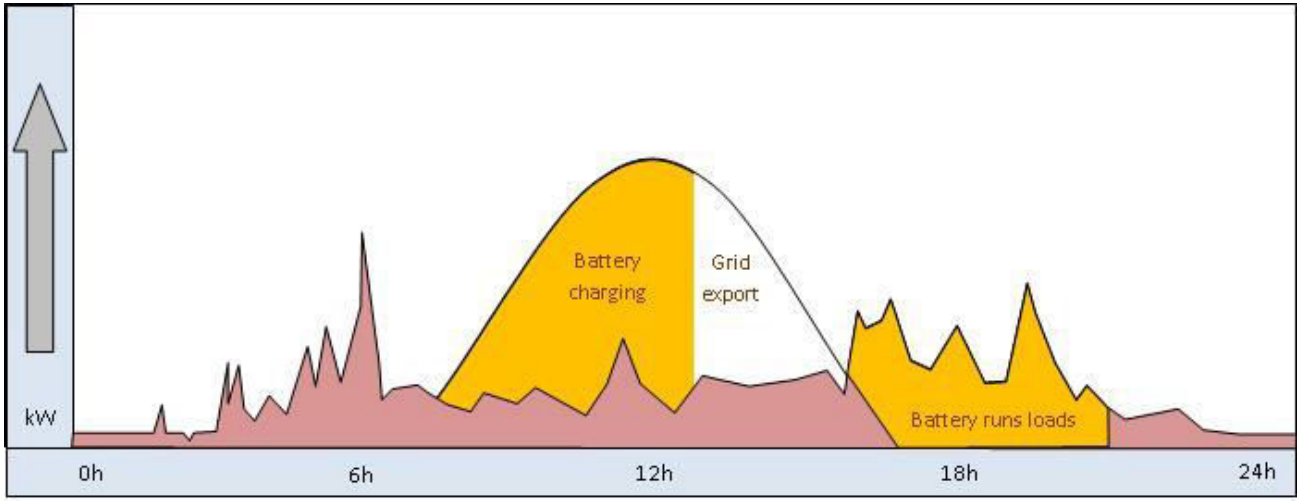

Understanding operation is key for a customer …

- Ensuring system sized to suit application
- Ensuring system efficiency & battery lifetime
- Preventing miss-selling

Many operating modes

- Peak lopping (export restriction)
- Minimising export (opportunity charging & maximising self-consumption)
- Time shifting – using power outside of the solar day
- Time shifting – exporting power later in the day
- Systems that allow smaller than normal inverters
- Systems that can provide power during a power cut
- Systems that can provide off-grid power for dedicated loads (& UPS)

Totally different charge / discharge cycles
Require very different system specs

Information for the customer

MCS requirements ?

- Battery nominal capacity
- Battery lifetime
- Charge – discharge efficiency
- Mains usage?
- Effect on FIT income
- Power cut operation

MCS

The Certification Mark for Onsite Sustainable Energy Technologies

Information for the customer

MCS requirements ?

- **Battery nominal capacity**
- Battery lifetime
- Charge – discharge efficiency
- Mains usage?
- Effect on FIT income
- Power cut operation

"Our product has a 500Ahr battery … whereas our competitors only has 300Ahr"

- C20 vs C100 rating?
- 500 x 24V = 12kW
- 300 x 48V = 14.4kW

Information for the customer

MCS requirements ?

- **Battery nominal capacity**
- **Battery lifetime**
- **Charge – discharge efficiency**
- Mains usage?
- Effect on FIT income
- Power cut operation

Standard text?

This battery has a total capacity of xxxkWh (at the C20 rate). However, to ensure a good battery life, the system is designed to cycle the battery down to no more than xx% discharged – this means an effective usable capacity of xxxkWh – this equates to a 100W light bulb operating for xxhours

Information for the customer

MCS requirements ?

- Battery nominal capacity
- Battery lifetime
- Charge – discharge efficiency
- **Mains usage?**
- **Effect on FIT income**
- Power cut operation

- Some systems use the grid to top-up battery (if insufficient sunshine / for equalisation charges) ...
  >> customer needs to know how much power is used per year

- Will battery losses reduce FIT income? (system design & location of kWh meter)
  >> Customer needs to understand reduction

Information for the customer

MCS requirements ?

- Battery nominal capacity
- Battery lifetime
- Charge – discharge efficiency
- Mains usage?
- Effect on FIT income
- **Power cut operation**

❖ Customers may reasonably expect the system to work during a power cut …

>> It may not
>> If it does: may not run all loads or for very long

Design & installation standards

bre

BRE NATIONAL SOLAR CENTRE

The Institution of Engineering and Technology

Membership Join, professional registration & career development

Resources Library, Inspec, bookshop, journals, standards & factfiles

Get Involved Communities, sectors, volunteers & discussion forums

Events Conferences, seminars, courses, lectures & visits

Policy & Media Thought leadership, media centre & public affairs

Home ▸ Resources ▸ Standards

Share |

Resources

- Inspec
- Library and Archives
- Journals
- Books
- Magazines
- Standards
  - Cyber security
- Wiring Regulations
- Conference proceedings
- Model forms of contract
- For teachers
- Advertising
- Subscribe or buy
- Author guides
- Contacts

DPC for Code of Practice for Grid-connected Solar Photovoltaic (PV) Systems

This page has been specifically posted for the 2014 Draft for Public Comment (DPC) stage of the Code of Practice for Grid-connected Solar Photovoltaic (PV) Systems development process, and is open to the public subject to the following terms:

- You may download the documents for your own use in reviewing content as part of the DPC process
- No further electronic copying is allowed without written permission
- You are permitted to pass on the web link to the registration page for other people to register with and review documents.
- You are not permitted to create a direct link to any of the DPC documents
- You are requested to return any comments using the DPC comment form provided
- The form should be electronically sent to the relevant Portfolio Development Manager using this email link.

If you use assistive technology and require a more accessible electronic format of these documents, please send a request including full contact details and requirements to the relevant Portfolio Development Manager using this email link.

Download form

Comment form (47 k)

This is the feedback form. To download the draft paper please fill out the form below. Please note that the period for receipt of public comment closes on Friday, 7 November 2014.

bre

BRE NATIONAL SOLAR CENTRE

Evolution

2002	First edition of the “DTI Guide”
2006	2nd Edition published
2007	MIS3002 published - refers to PV guide
2012	MCS PV Guide issued
2013	IET – NSC start work on PV CoP
2014	IET issues CoP for public comment
2015	Working through >350 comments

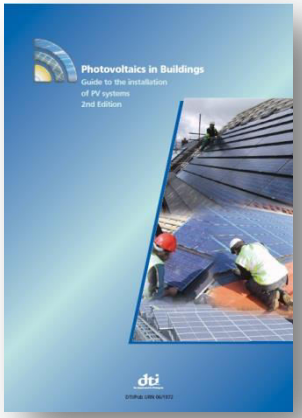

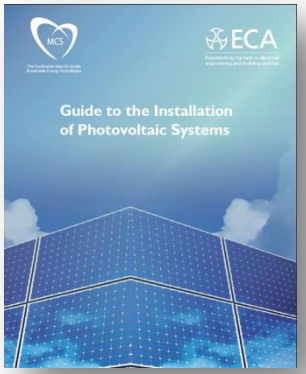

Ready soon!

Scope …

"This Code of Practice sets out the requirements for the design, specification, installation, commissioning, operation and maintenance of grid-connected solar photovoltaic (PV) systems installed in the UK. The scope of this Code of Practice covers:

- *All parts of a grid-connected solar PV system up to, and including, the connection to the AC mains.*
- *LV and HV connections and components.*
- *All scales of application, from small domestic systems to large-scale PV farms.*
- *Building-mounted, building-integrated and ground-mounted systems.*
- ***Grid-connected systems with battery storage.***
- *Systems with an open circuit DC voltage of greater than 30VDC and less than 1,500VDC.*

IET PV CoP - Key battery sections

- Battery: main overcurrent protection
- Battery isolation
- PV array/string overcurrent protection
- DC cables and component ratings
- Battery installation
- Isolation and switching for off-grid operation

IET PV CoP - Key battery sections

- Battery: main overcurrent protection
- Battery isolation
- PV array/string overcurrent protection
- DC cables and component ratings
- Battery installation
- Isolation and switching for off-grid operation

NB: many other sections of the IET CoP are also very relevant

IET PV CoP - Key battery sections

- Battery: main overcurrent protection
- Battery isolation
- PV array/string overcurrent protection
- DC cables and component ratings
- Battery installation
- Isolation and switching for off-grid operation

Various requirements, but key is the location and having an interrupt rating that is higher than the batteries rated short-circuit current

IET PV CoP - Key battery sections

- Battery: main overcurrent protection
- Battery isolation
- PV array/string overcurrent protection
- DC cables and component ratings
- Battery installation
- Isolation and switching for off-grid operation

Potential for fault currents to flow from the battery into the DC side of the system …

- Fuses OK?
- Cables & other components OK?

IET PV CoP - Key battery sections

- Battery: main overcurrent protection
- Battery isolation
- PV array/string overcurrent protection
- DC cables and component ratings
- Battery installation
- Isolation and switching for off-grid operation

- Location / access
- Ventilation
- Temperature control
- Terminals protected
- Containment (corrosive)
- PPE
- Labelling

IET PV CoP - Key battery sections

- Battery: main overcurrent protection
- Battery isolation
- PV array/string overcurrent protection
- DC cables and component ratings
- Battery installation
- Isolation and switching for off-grid operation

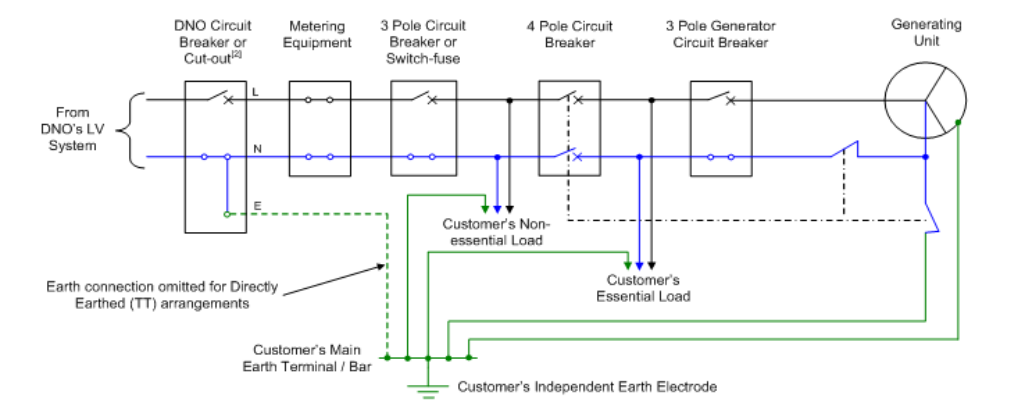

- G59
- Neutral – earth bond

Related topic … export limitation

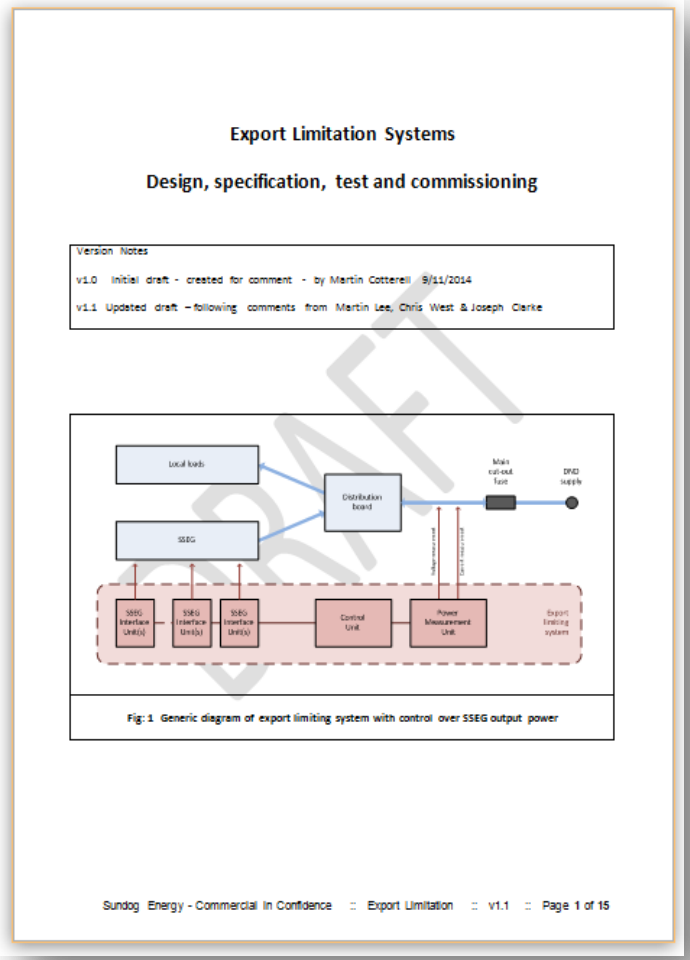

Export Limitation Systems

Design, specification, test and commissioning

Version	Notes
v1.0	Initial draft - created for comment - by Martin Cotterell 9/11/2014
v1.1	Updated draft – following comments from Martin Lee, Chris West & Joseph Clarke

Fig: 1 Generic diagram of export limiting system with control over SSEG output power

Work in progress
For another session!

bre

BRE NATIONAL SOLAR CENTRE

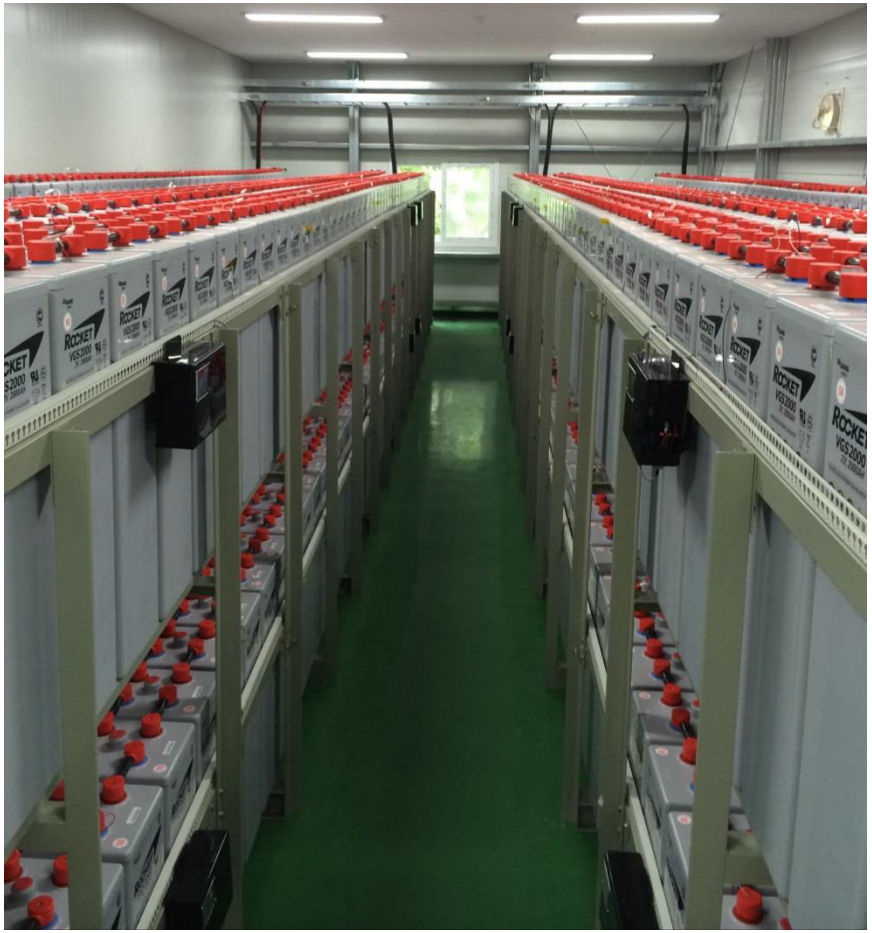

Questions …

martin@sundog-energy.co.uk

www.thesolarPVblog.com

msundog